HIRETECH HT8-1.2 EX DRUM FLOOR SANDER PARTS DRAWING

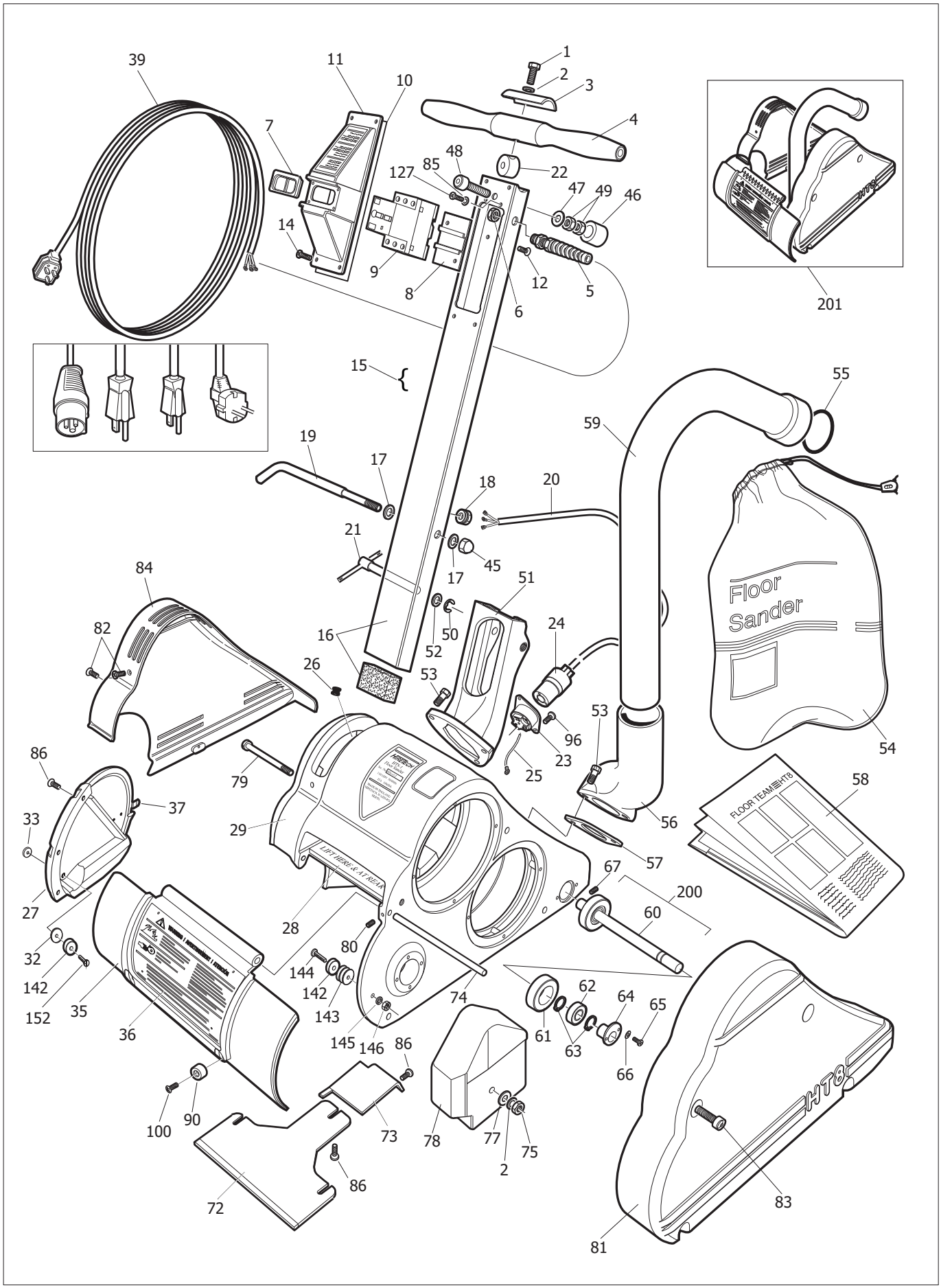

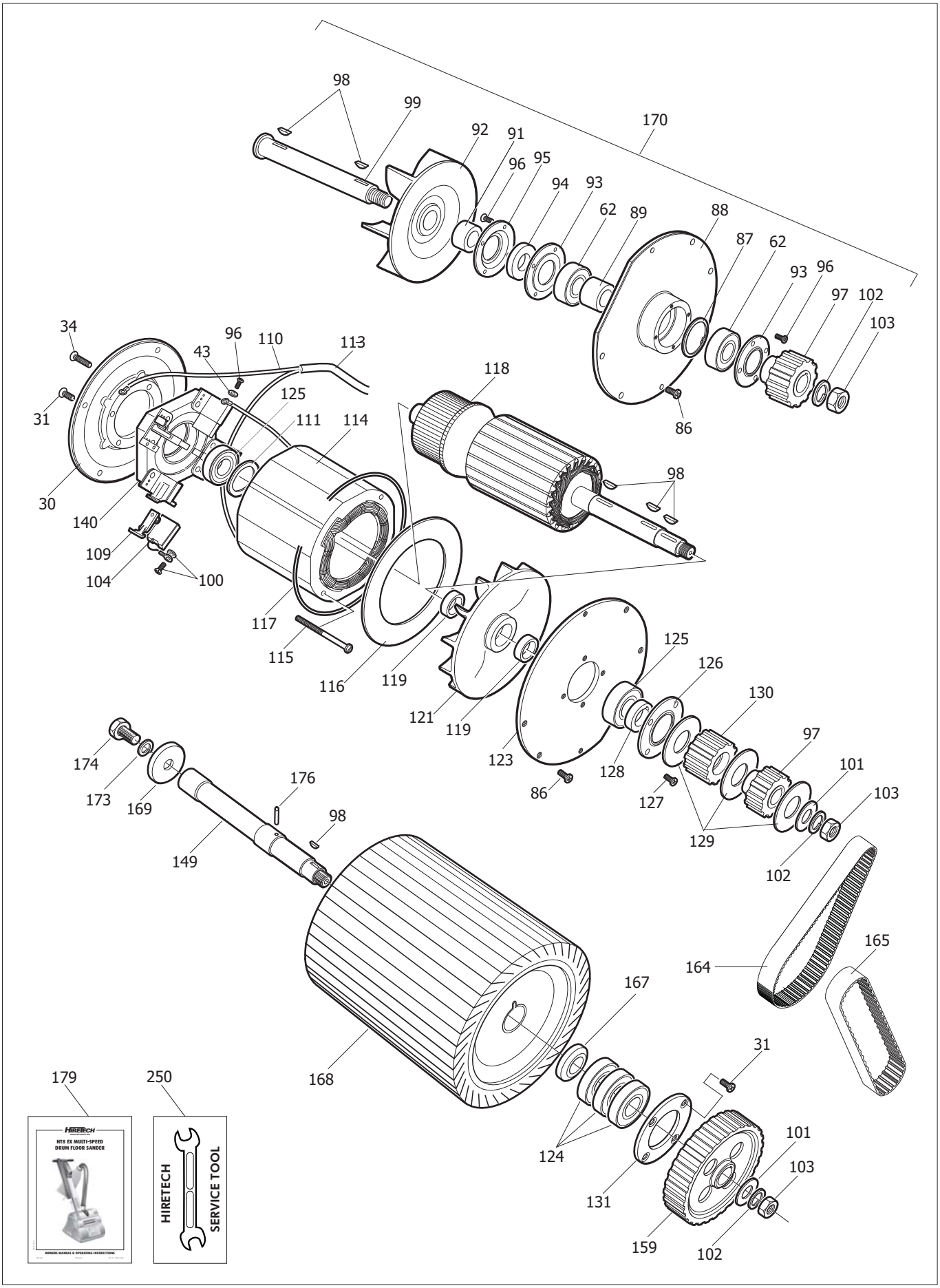
98
99
170
92
91
96
95
94
93
62
89
88
87
62
93
96
97
102
103
34
96
110
113
43
118
125
31
111
114
86
98
30
140
109
104
100
117
115
116
119
121
119
123
125
126
130
97
174
173
169
176
98
86
128
127
101
103
129
149
102
164
165
167
168
31
179
250
124
101
103
131
159
102
HIRETECH
HT8 EX MULTI-SPEED
DRUM FLOOR SANDER
OWNERS MANUAL & OPERATING INSTRUCTIONS
HIRETECH
SERVICE TOOL