HIRETECH HTW-5 STEAM WALLPAPER STRIPPER PARTS DRAWING
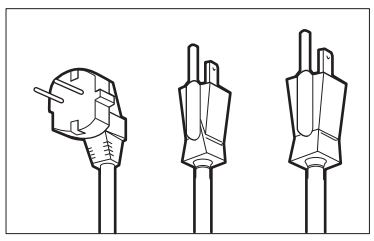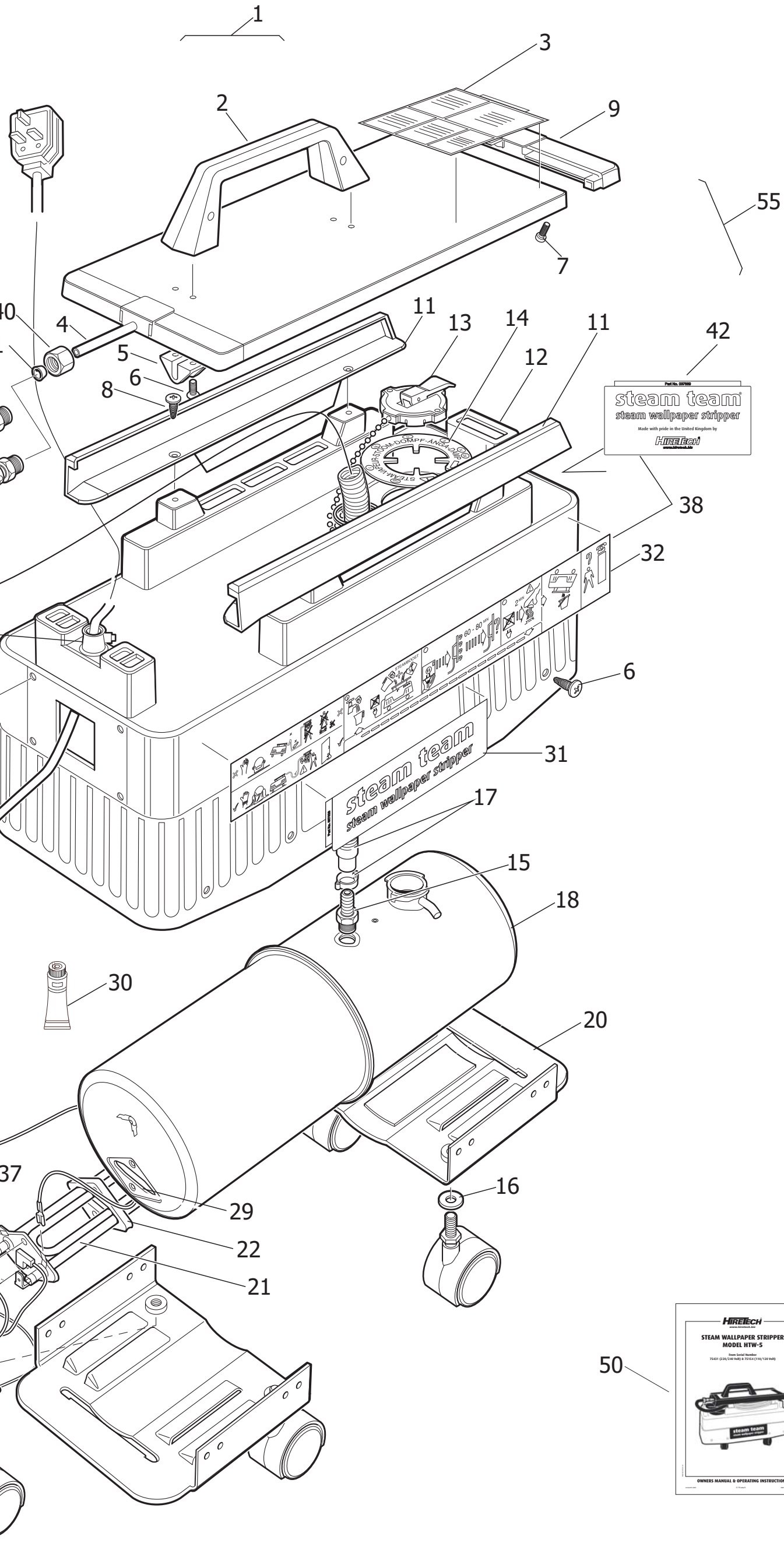
North America Only